Si4310

Features

- Low On resistance.
- −4.5V drive.
- RoHS compliant.

Package Dimensions

unit : mm
SOP-8

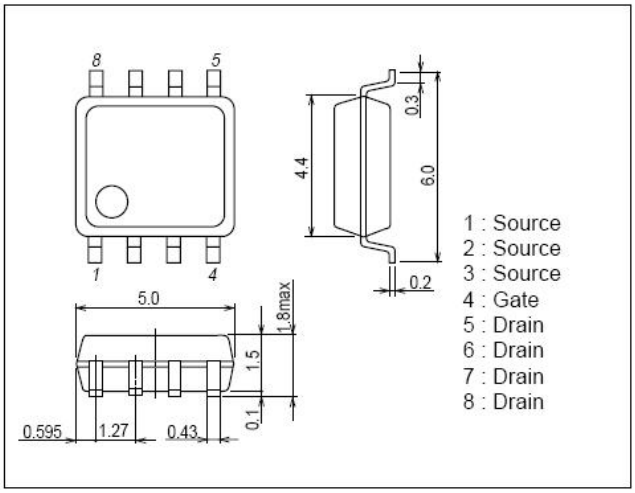

Specifications

Absolute Maximum Ratings at T_a=25^{0}C

Parameter	Symbol	Conditions	Ratings	Unit
Drain-to-Source Voltage	V_{DSS}		-30	V
Gate-to-Source Voltage	V_{GSS}		±20	V
Drain Current (DC)	I_D		-9.3	A
Drain Current (Pulse)	I_{DP}	PW≤10uS, duty cycle≤1%	-37	A
Allowable Power Dissipation	P_D	Mounted on a ceramic board (1000mm^2×0.8mm) 1unit	3.1	W
Total Dissipation	P_T	Mounted on a ceramic board (1000mm^2×0.8mm)	2	W
Channel Temperature	T_{ch}		150	^{0}C
Storage Temperature	T_{stg}		-55~+150	^{0}C

Electrical Characteristics at T_a=25^{0}C

Parameter	Symbol	Conditions	Ratings			Unit
			min	typ	max	
Drain-to-Source Breakdown Voltage	$V_{(BR)DSS}$	I_D=-250uA, V_{GS}=0V	-30			V
Zero-Gate Voltage Drain Current	I_{DSS}	V_{DS}=-30V, V_{GS}=0V			-10	uA
Gate-to-Source Leakage Current	I_{GSS}	V_{GS}=±20V, V_{DS}=0V			±100	nA
Gate Threshold Voltage	$V_{GS(th)}$	V_{DS}= V_{GS}, I_D=-250uA	-1.3	-1.8	-2.3	V
Forward Transconductance	g_{FS}	V_{DS}=-5V, I_D=-10A		24		S
Static Drain-to-Source On-State Resistance	$R_{DS(ON)}$	I_D=-9.3A, V_{GS}=-10V		23	28	mΩ
	$R_{DS(ON)}$	I_D=-4A, V_{GS}=-4.5V		32	38	mΩ
Input Capacitance	C_{iss}	V_{DS}=-15V, V_{GS}=0V, f=1MHz		840		pF
Output Capacitance	C_{oss}	V_{DS}=-15V, V_{GS}=0V, f=1MHz		150		pF
Reverse Transfer Capacitance	C_{rss}	V_{DS}=-15V, V_{GS}=0V, f=1MHz		110		pF

Electrical Characteristics at T_a=25^{0}C (Continued)

Parameter	Symbol	Conditions	Ratings			Unit
			min	Typ	max	
Turn-on Delay Time	$t_{d(on)}$	V_{GS}=-10V, V_{DS}=-15V, R_L=15Ω, R_{GEN}=6Ω		7.5		nS
Rise Time	t_r			8		nS
Turn-off Delay Time	$t_{d(off)}$			37		nS
Fall Time	t_f			16		nS
Total Gate Charge	Q_g	V_{DS}=-15V, V_{GS}=-10V, I_D=-9.3A		18		nC
Gate-to-Source Charge	Q_{gs}			3		nC
Gate-to-Drain "Miller" Charge	Q_{gd}			4		nC
Diode Forward Voltage	V_{SD}	I_S=-2.1A, V_{GS}=0V		-0.8	-1.2	V

Pin Desctiption

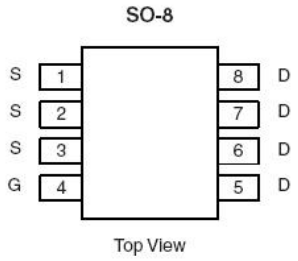

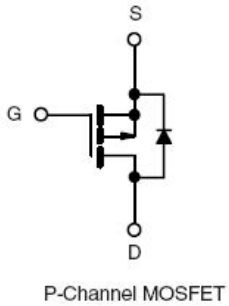

Typical Characteristics at T_a=25^{0}C

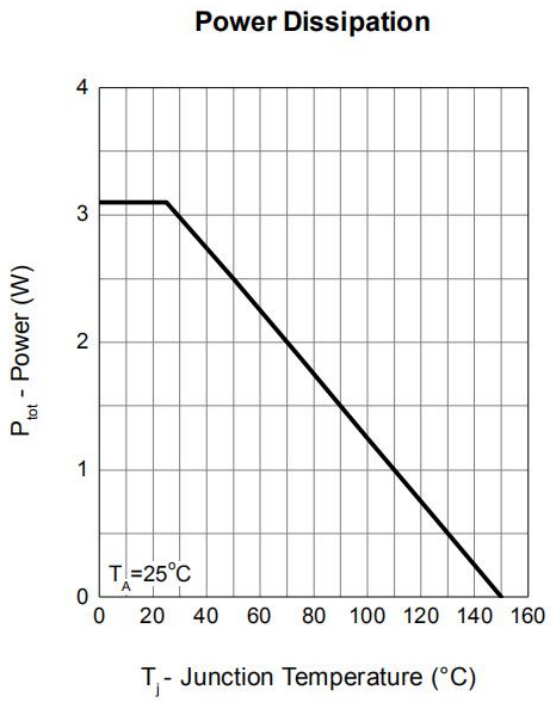

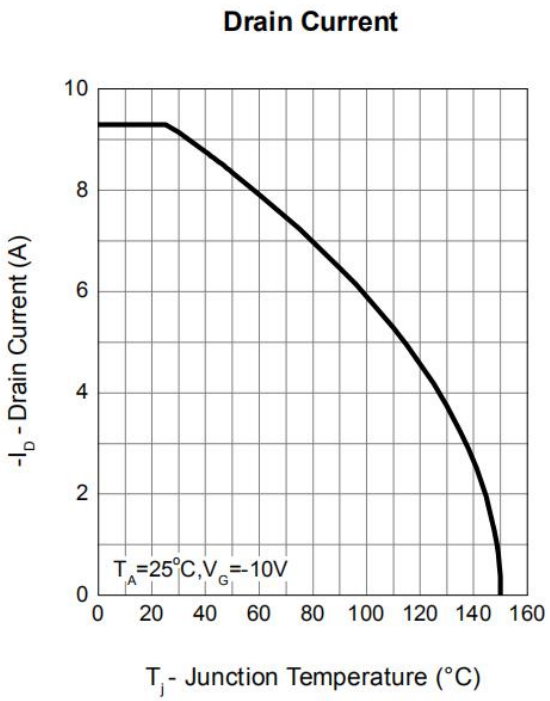

Safe Operation Area

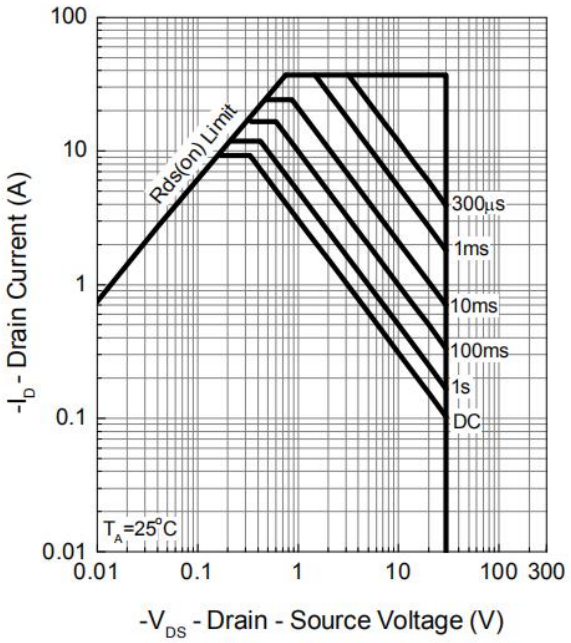

Thermal Transient Impedance

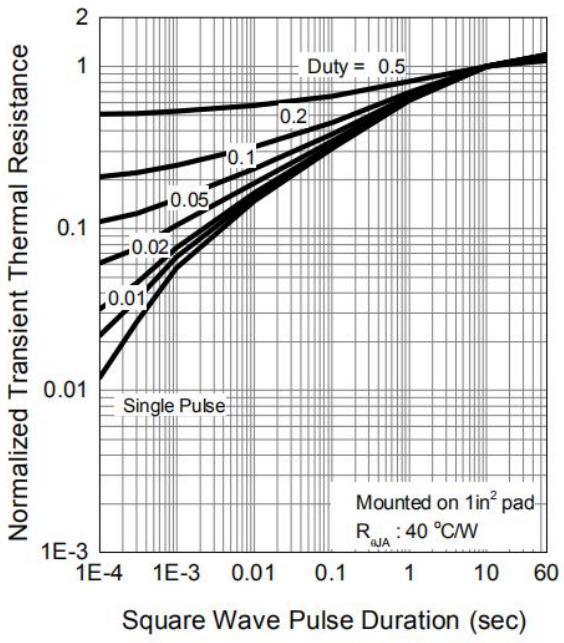

Gate-Source On Resistance

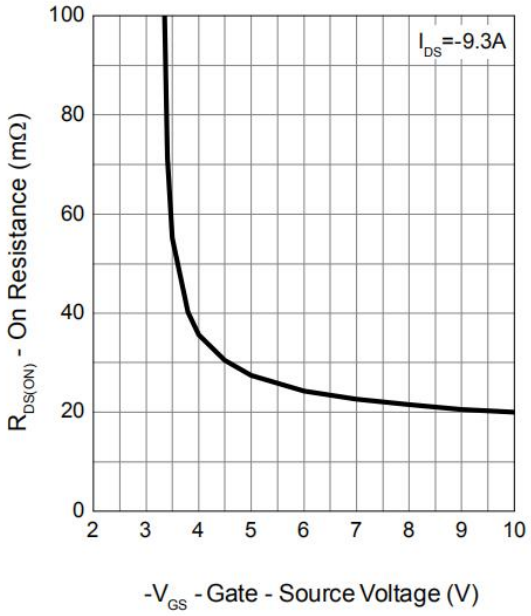

Gate Threshold Voltage

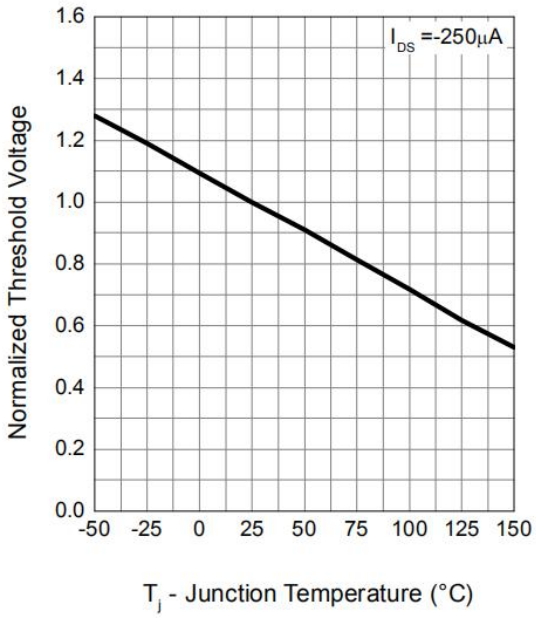

Drain-Source On Resistance

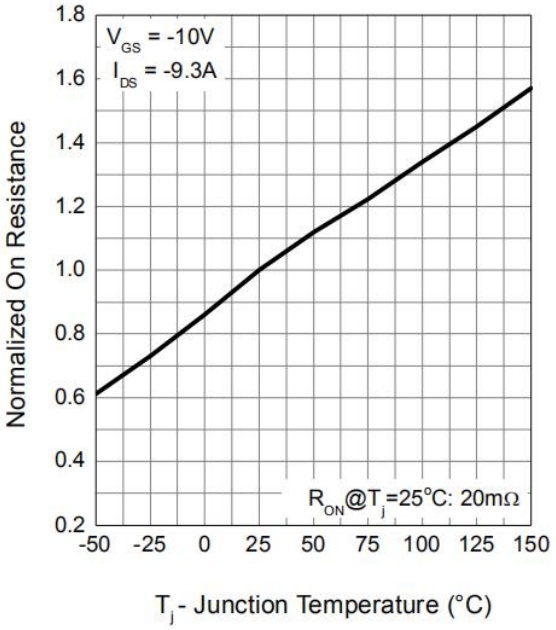

Source-Drain Diode Forward

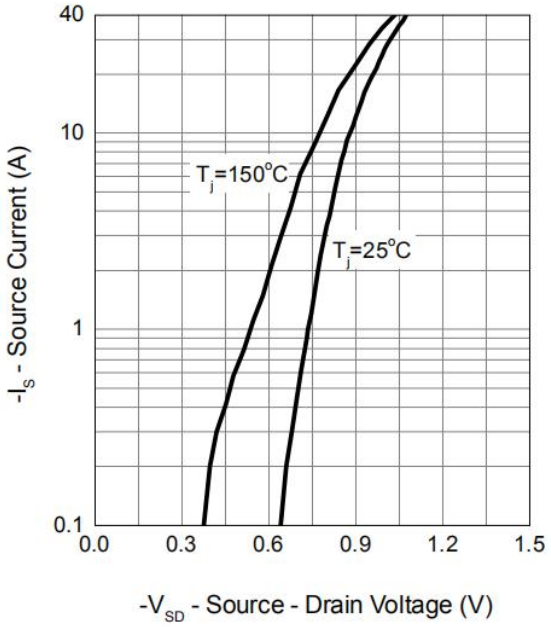

Avalanche Test Circuit and Waveforms

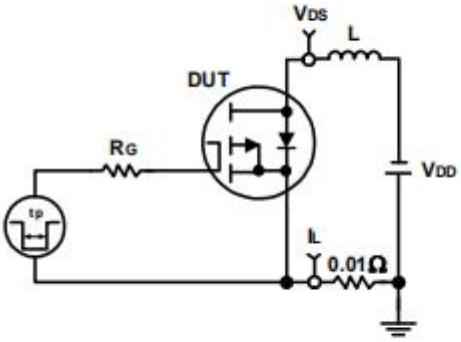

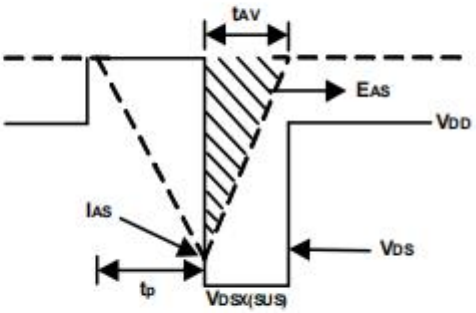

Switching Time Test Circuit and Waveforms